PHILIPS

Fortimo

LED

Fortimo High Bay module

Datasheet

Fortimo High Bay Module

Fortimo High Bay is an integrated module solution with IP65 protection, excellent optical and heat management that offers high energy efficacy and high quality of light. The Fortimo High bay solution is designed to enable LED lighting in Industry (high-bay) applications - warehouses, factories, large-format retail stores. A range of compatible IP67 Xitanium drivers complement the High Bay solution in order to further differentiate on efficacy and lifetime under extreme temperature conditions. This High Bay portfolio is suitable to replace similar solutions using conventional 100W, 150W, 250W and 400W.

Key features and benefits

- IP65 integrated heat sink and optics
- Tempered glass with protective film
- High energy efficacy,typically140 lm/W
- Various lumen-level solutions, 10K, 15K, 20K, 24K lm
- 2 Color temperatures: 4000K, 5700K
- CRI 80
- Enables complete IP65 system with IP driver
- Easy design-in
- Relatively low investment
- Reliable and flexible
- 5 years system warranty

April 2017

Ordering data

Commercial product name	EOC	12NC	Box quantity
Fortimo High Bay Module 10KLM 840		9290 014 32180	1
Fortimo High Bay Module 15KLM 840		9290 014 32080	1
Fortimo High Bay Module 20KLM 840		9290 014 32280	1
Fortimo High Bay Module 24KLM 840		9290 014 32380	1
Fortimo High Bay Module 10KLM 857		9290 014 32480	1
Fortimo High Bay Module 15KLM 857		9290 014 32580	1
Fortimo High Bay Module 20KLM 857		9290 014 32680	1
Fortimo High Bay Module 24KLM 857		9290 014 32780	1
Reflector High Bay 310MM 60D		9290 014 33080	20
Reflector High Bay 310MM 90D		9290 014 33180	20
Reflector High Bay 360MM 60D		9290 014 32880	20
Reflector High Bay 360MM 90D		9290 014 32980	20

Drive currents

Parameter	Nominal*	Life**	Max***	Unit
Fortimo High Bay module	1050	1050	2800	mA

Module temperatures

Parameter	Nominal*	Life**	Max***	Unit
T_c (case temperature at T_c point)	70	85	85	°C

* Nominal value at which typical performance is specified

** Value at which life time is specified

*** Maximum value for safe operation, do not operate above this value

Optical characteristics - table per color (CCT)

Fortimo High Bay Module 10KLM 840

Parameter	Min	Typ	Max	Unit
Luminous flux	9000	10000	12000	lm
Module efficacy		140		lm/W
Correlated color temperature (CCT)		4000		K
Color coordinates (CIEx, CIEy)		(0.380, 0.380)		-
Color consistency			6	SDCM
CRI	80	82		
Photobiological safety			RG1	

Measurement precision for luminous flux data is +/- 5%.Measurement precision for color point is +/- 0.005. Mearuement precision for CRI is +/- 1.5

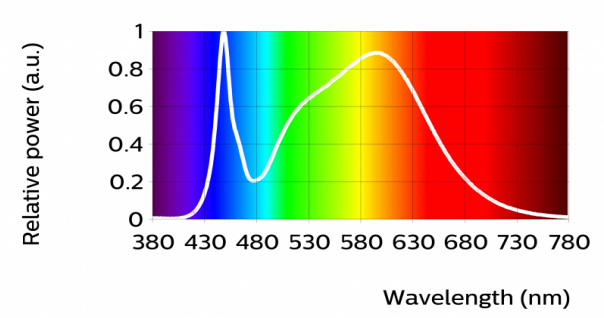

Fortimo High Bay Module 15KLM 840

Parameter	Min	Typ	Max	Unit
Luminous flux	13500	15000	18000	lm
Module efficacy		150		lm/W
Correlated color temperature (CCT)		4000		K
Color coordinates (CIEx, CIEy)		(0.380, 0.380)		-
Color consistency			6	SDCM
CRI	80	82		
Photobiological safety			RG1	

Measurement precision for luminous flux data is +/- 5%.Measurement precision for color point is +/- 0.005. Mearuement precision for CRI is +/- 1.5

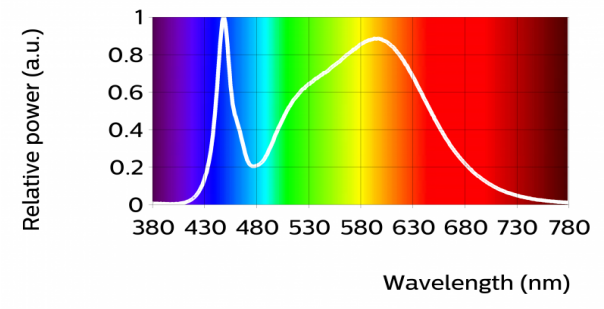

Fortimo High Bay Module 20KLM 840

Parameter	Min	Typ	Max	Unit
Luminous flux	18000	20000	24000	lm
Module efficacy		148		lm/W
Correlated color temperature (CCT)		4000		K
Color coordinates (CIEx, CIEy)		(0.380, 0.380)		-
Color consistency			6	SDCM
CRI	80	82		
Photobiological safety			RG1	

Measurement precision for luminous flux data is +/- 5%.Measurement precision for color point is +/- 0.005. Mearuement precision for CRI is +/- 1.5

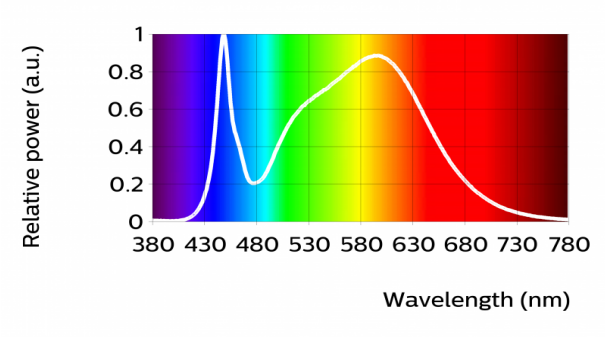

Fortimo High Bay Module 24KLM 840

Parameter	Min	Typ	Max	Unit
Luminous flux	21600	24000	28800	lm
Module efficacy		146		lm/W
Correlated color temperature (CCT)		4000		K
Color coordinates (CIEx, CIEy)		(0.380, 0.380)		-
Color consistency			6	SDCM
CRI	80	82		
Photobiological safety			RG1	

Measurement precision for luminous flux data is +/- 5%.Measurement precision for color point is +/- 0.005. Mearuement precision for CRI is +/- 1.5

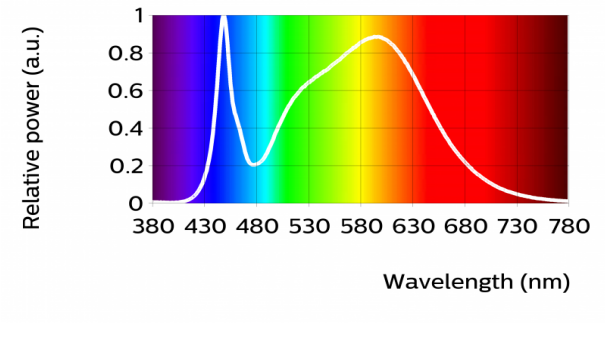

Fortimo High Bay Module 10KLM 857

Parameter	Min	Typ	Max	Unit
Luminous flux	9000	10000	12000	lm
Module efficacy		140		lm/W
Correlated color temperature (CCT)		5700		K
Color coordinates (CIEx, CIEy)		(0.327, 0.339)		-
Color consistency			6	SDCM
CRI	80	82		
Photobiological safety			RG1	

Measurement precision for luminous flux data is +/- 5%.Measurement precision for color point is +/- 0.005. Mearuement precision for CRI is +/- 1.5

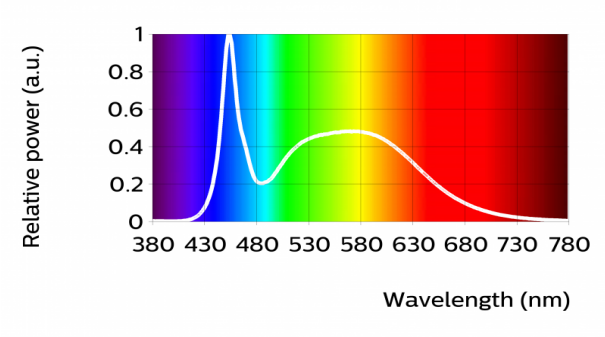

Fortimo High Bay Module 15KLM 857

Parameter	Min	Typ	Max	Unit
Luminous flux	13500	15000	18000	lm
Module efficacy		150		lm/W
Correlated color temperature (CCT)		5700		K
Color coordinates (CIEx, CIEy)		(0.327, 0.339)		-
Color consistency			6	SDCM
CRI	80	82		
Photobiological safety			RG1	

Measurement precision for luminous flux data is +/- 5%.Measurement precision for color point is +/- 0.005. Mearuement precision for CRI is +/- 1.5

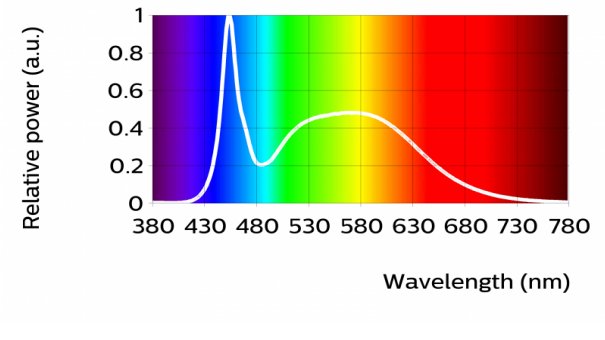

Fortimo High Bay Module 20KLM 857

Parameter	Min	Typ	Max	Unit
Luminous flux	18000	20000	24000	lm
Module efficacy		148		lm/W
Correlated color temperature (CCT)		5700		K
Color coordinates (CIEx, CIEy)		(0.327, 0.339)		-
Color consistency			6	SDCM
CRI	80	82		
Photobiological safety			RG1	

Measurement precision for luminous flux data is +/- 5%.Measurement precision for color point is +/- 0.005. Mearuement precision for CRI is +/- 1.5

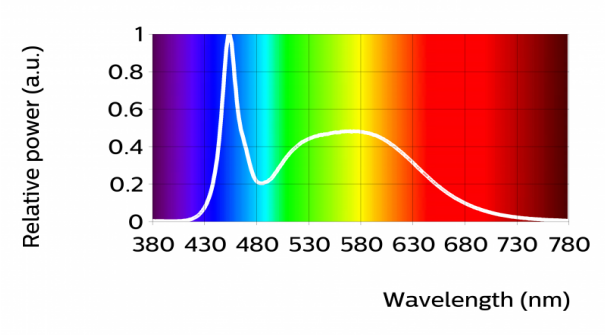

Fortimo High Bay Module 24KLM 857

Parameter	Min	Typ	Max	Unit
Luminous flux	21600	24000	28800	lm
Module efficacy		146		lm/W
Correlated color temperature (CCT)		5700		K
Color coordinates (CIEx, CIEy)		(0.327, 0.339)		-
Color consistency			6	SDCM
CRI	80	82		
Photobiological safety			RG1	

Measurement precision for luminous flux data is +/- 5%.Measurement precision for color point is +/- 0.005. Mearuement precision for CRI is +/- 1.5

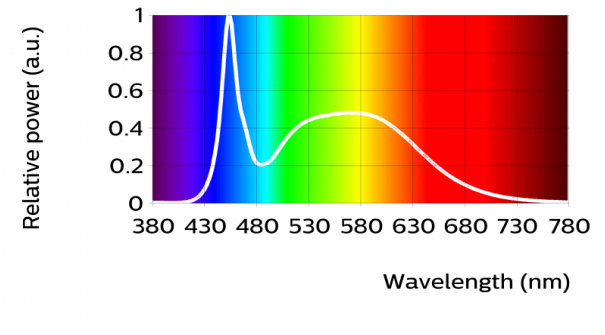

Beam shape

Light distribution of the Fortimo High Bay Module

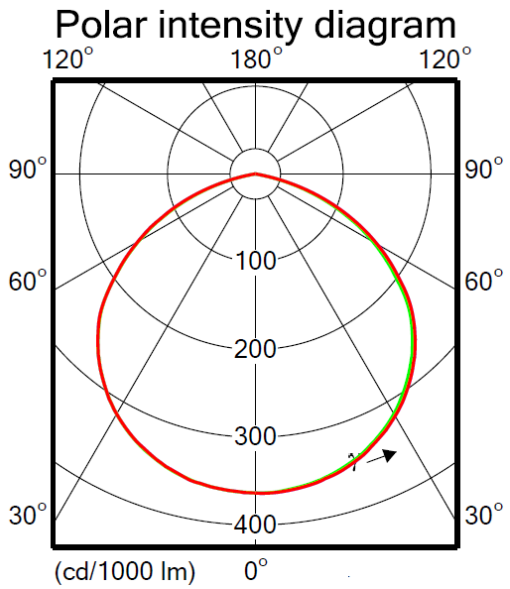

Light distribution of the Fortimo High Bay Module with 60D reflector

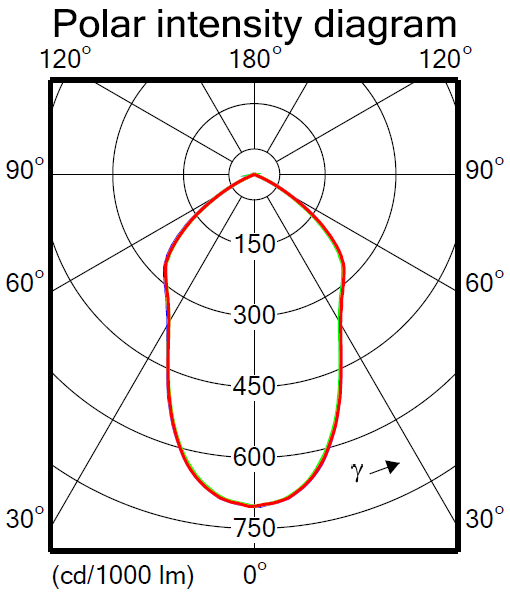

Light distribution of the Fortimo High Bay Module with 90D treflector

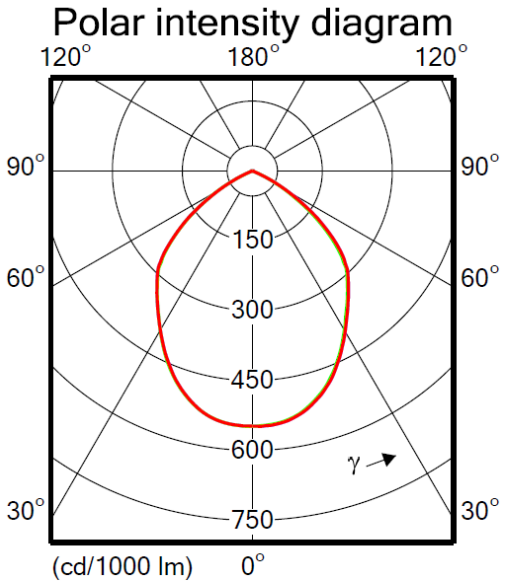

Fortimo High Bay Module 10KLM 840
Fortimo High Bay Module 10KLM 857

Parameter	Min	Typ	Max	Unit
Forward voltage		68.0	79.2	V
Power consumption		71.0	83.2	W

Measurement precision for Vf +/- 3%. Measurement precision for power +/- 3.3%

Fortimo High Bay Module 15KLM 840
Fortimo High Bay Module 15KLM 857

Parameter	Min	Typ	Max	Unit
Forward voltage		95.0	112.2	V
Power consumption		100.0	117.8	W

Measurement precision for Vf +/- 3%. Measurement precision for power +/- 3.3%

Fortimo High Bay Module 20KLM 840
Fortimo High Bay Module 20KLM 857

Parameter	Min	Typ	Max	Unit
Forward voltage		129.0	151.8	V
Power consumption		135.0	159.4	W

Measurement precision for Vf +/- 3%. Measurement precision for power +/- 3.3%

Fortimo High Bay Module 24KLM 840
Fortimo High Bay Module 24KLM 857

Parameter	Min	Typ	Max	Unit
Forward voltage		157.0	184.8	V
Power consumption		165.0	194.0	W

Measurement precision for Vf +/- 3%. Measurement precision for power +/- 3.3%

Life time

Parameter	Value	Unit
C10 at Tc life	50000	hours

Lumen maintenance graphs

Lumen maintenance at I-life and Tc-life conditions

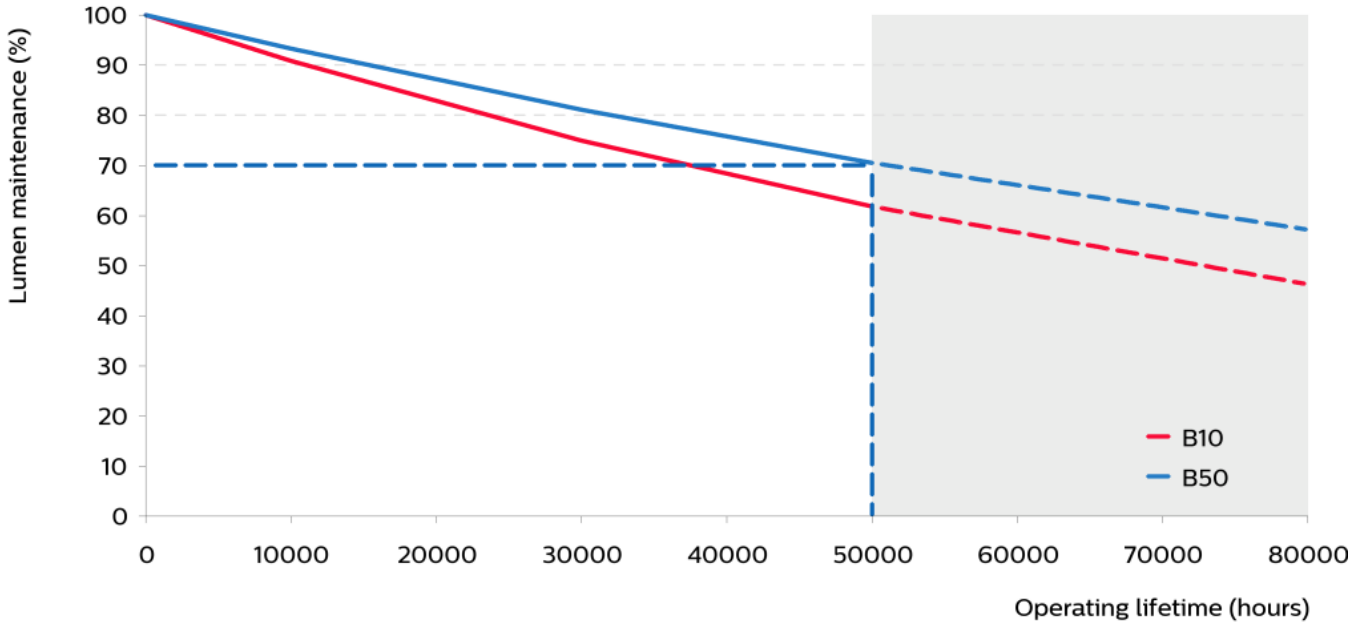

Wiring

Specification item	Condition
Input wire	S2M705020-0411, 2pin push in male connector

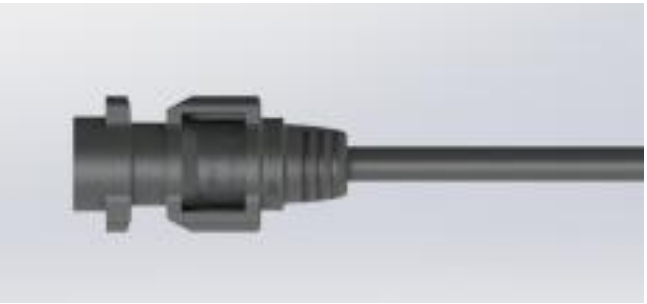

Mechanical characteristics

Fortimo High Bay Module 10KLM 840
Fortimo High Bay Module 15KLM 840
Fortimo High Bay Module 10KLM 857
Fortimo High Bay Module 15KLM 857

Parameter	Min	Typ	Max	Unit
Length	269	271	273	mm
Width	269	271	273	mm
Height	108	110	112	mm

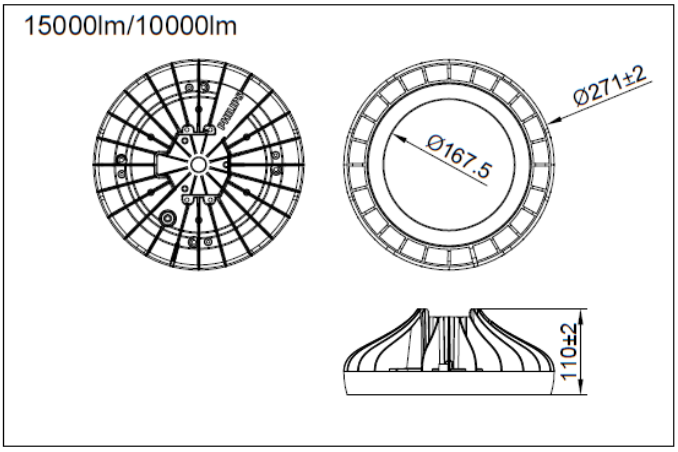

Fortimo High Bay Module 20KLM 840
Fortimo High Bay Module 20KLM 857

Parameter	Min	Typ	Max	Unit
Length	269	271	273	mm
Width	269	271	273	mm
Height	108	110	112	mm

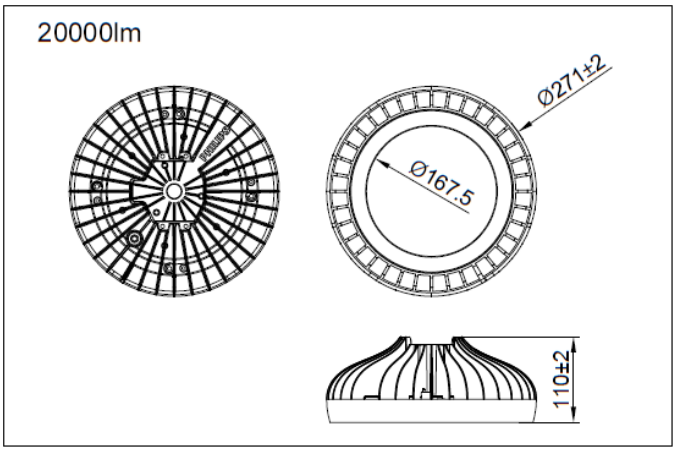

Fortimo High Bay Module 24KLM 840
Fortimo High Bay Module 24KLM 857

Parameter	Min	Typ	Max	Unit
Length	308	310	312	mm
Width	308	310	312	mm
Height	113	115	117	mm

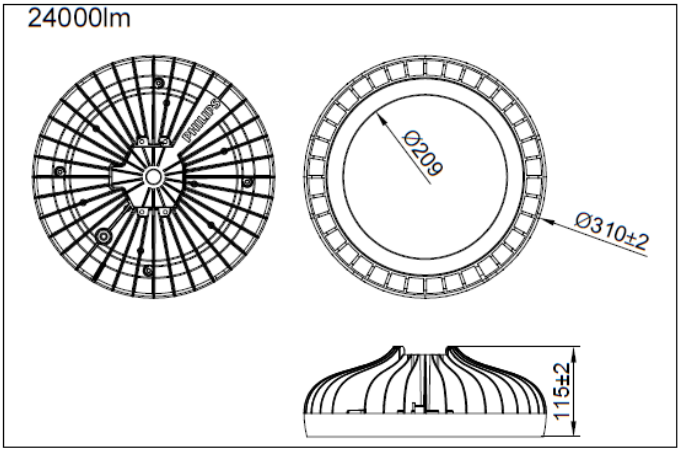

Reflector High Bay 310MM 60D

Parameter	Min	Typ	Max	Unit
Length		337		mm
Width		337		mm
Height		80		mm

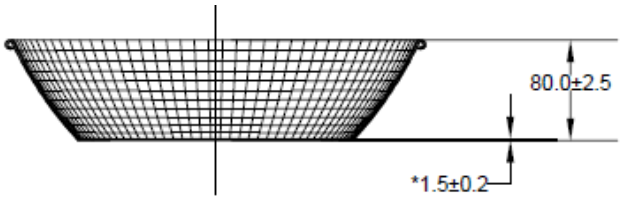

Reflector High Bay 310MM 90D

Parameter	Min	Typ	Max	Unit
Length		337		mm
Width		337		mm
Height		80		mm

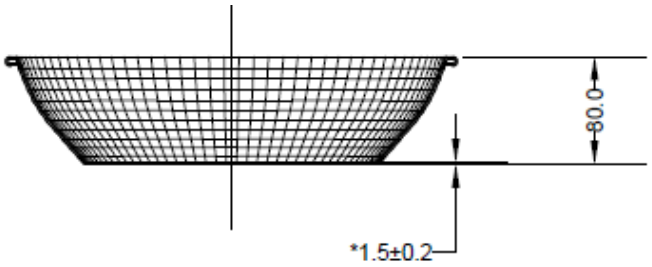

Reflector High Bay 360MM 60D

Parameter	Min	Typ	Max	Unit
Length		380.5		mm
Width		380.5		mm
Height		86.5		mm

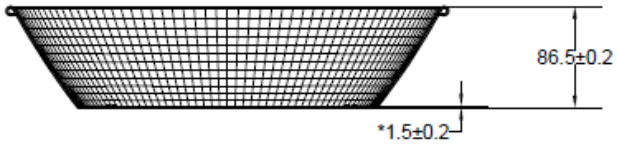

Reflector High Bay 360MM 90D

Parameter	Min	Typ	Max	Unit
Length		373		mm
Width		373		mm
Height		80		mm

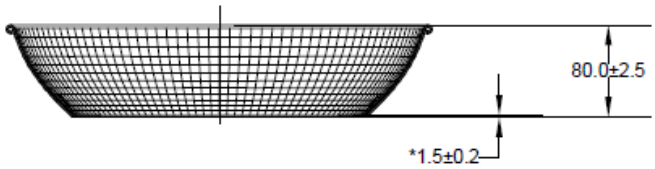

Absolute ratings

Parameter	Min	Typ	Max	Unit
Current through the LED module (I-max)			2800	mA
Ambient temperature	-30		50	°C

Application information

Certificates and Standards
KC
CB/CQC

Environmental
RoHS/REACH

Application	
IP rating	65
Overheating protection	No protection
Luminaire class	IEC Class I
Dimming	Yes

© 2017 Philips Lighting Holding B.V. All rights reserved.
This document contains information relating to the Philips Lighting portfolio, intended for companies who may be interested in developing their product offering. Note that the information provided is subject to change. Philips Lighting does not give any representation or warranty as to the accuracy or completeness of the information included herein and shall not be liable for any action in reliance thereon. The information presented in this document is not intended as any commercial offer and does not form part of any quotation or contract.

04/2017

www.philips.com/technology